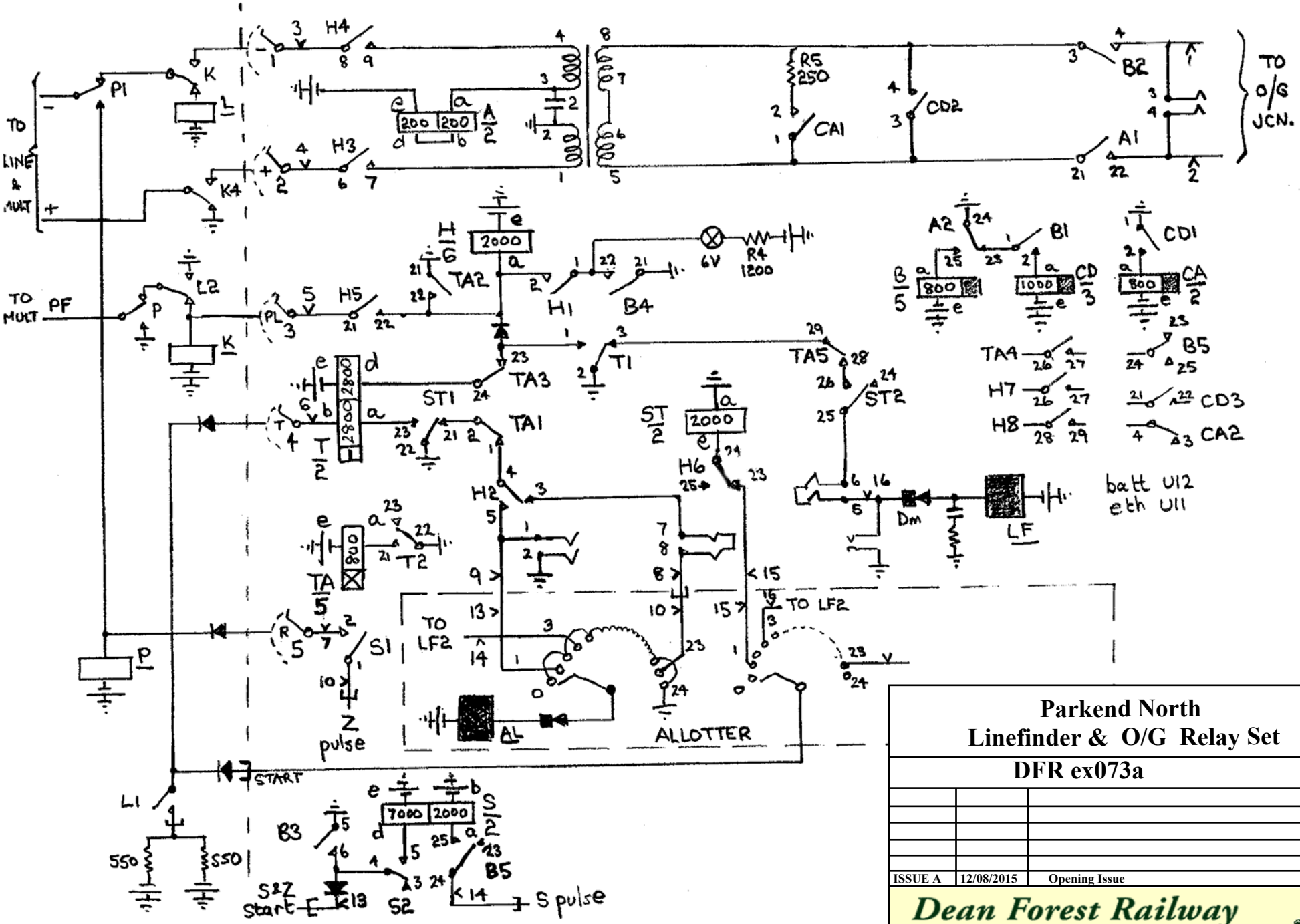

Parkend North
Linefinder & O/G Relay Set

DFR ex073a

ISSUE A	12/08/2015	Opening Issue

Dean Forest Railway